RX4-SR POST MOUNT CALIPER
ASSEMBLY

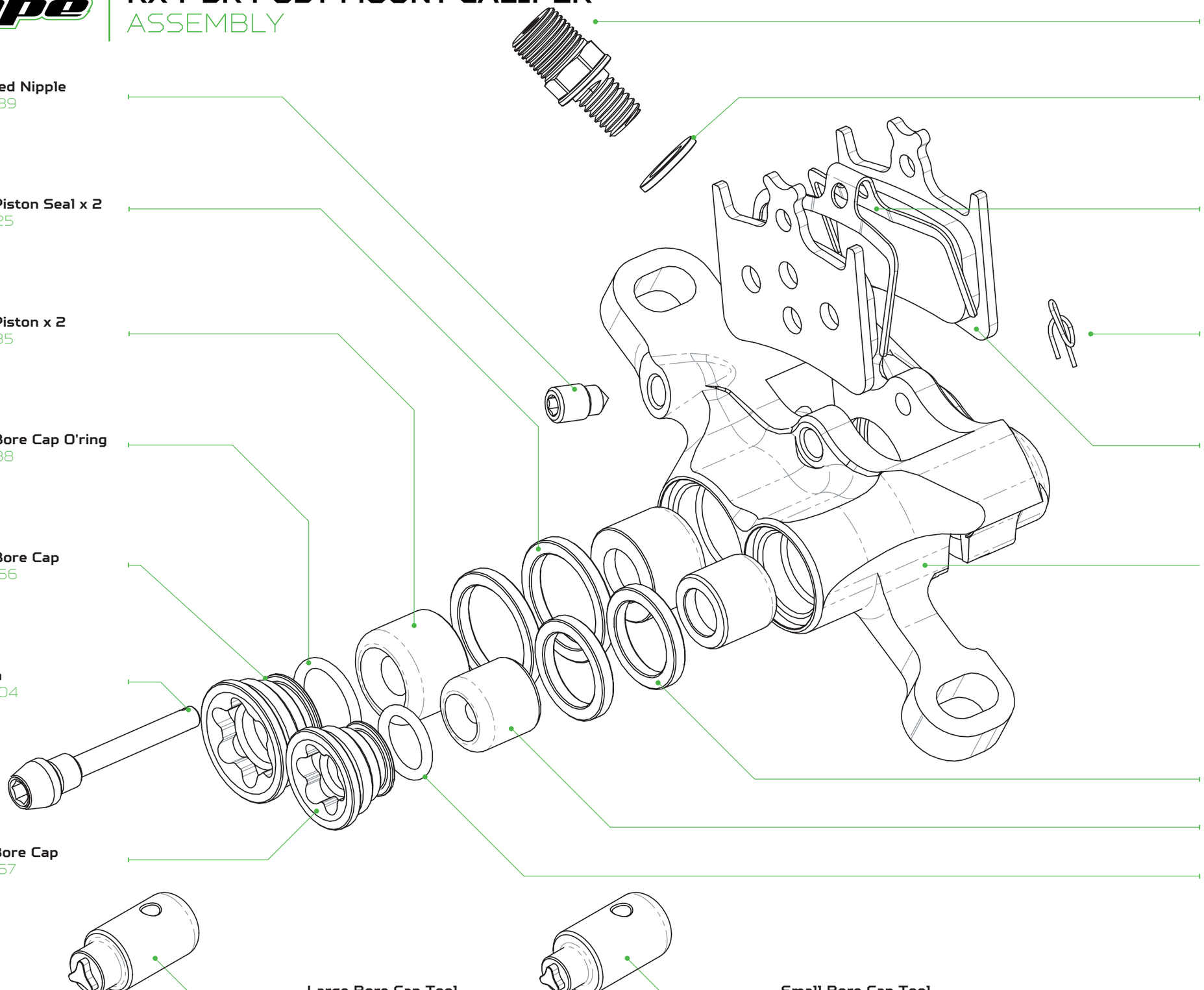

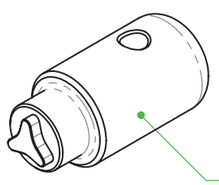

Large Bore Cap Tool
HTTC-TB
NOT TO SCALE

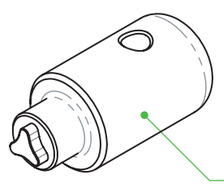

Small Bore Cap Tool
HTTC-TA
NOT TO SCALE